Hornet® 2.5

2.5" Round Downlights

PROJECT: **TYPE:**

Features

Hornet 2.5 - the lighting solution that sets a new standard in comfort and performance. With its unique design, the Hornet 2.5 features a deep bevel and low-intensity flashing that provides an unparalleled level of comfort without compromising on performance.
Hornet 2.5 is not only comfortable, but it's also incredibly energy-efficient. With efficacy above 100 lm/W, the Hornet 2.5 meets modern energy-saving goals and delivers the highest efficacy possible, thanks to its new generation LED technology and optical package.
Despite its compact size, the Hornet 2.5 comes with a standard integral driver, making it fully serviceable from below. It offers adjustable and wall wash options, as well as trimless and millwork options, making it a versatile solution that can fit any space or design.

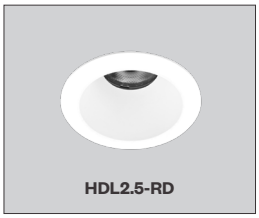
HDL2.5-RD

HDL2.5-RD-TL/MWK

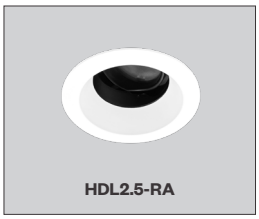
HDL2.5-RA

HDL2.5-RA-TL/MWK

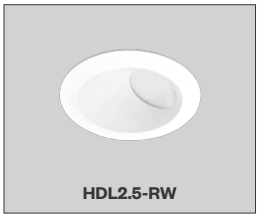
HDL2.5-RW

HDL2.5-RW-TL/MWK

Product Overview

Type:	Recessed Round Downlight, Adjustable, Wall Wash
Wattage:	6W, 8W, 10W, 12W, 14W, 16W, 19W
Color Temp:	2700K, 3000K, 3500K, 4000K Signature LED options in 2700K & 3000K
CRI:	90+ typ.
Dimming:	**Wired:** TRIAC & ELV, Hi-lume®, 0-10V, DALI **Wireless:** Lutron Athena RF node, BubblyNet Bluetooth
UGR:	<11 overall *(see pgs 7-8 for detailed values)*

Certifications

5 year limited warranty

Fixture Summary

Performance Data

Watts	Delivered Lumens	LPW	CBCP	Color Temp, CRI
6	714	119	2569	3000K, 90+
8	933	116.6	3354	3000K, 90+
10	1151	115.1	4140	3000K, 90+
12	1369	114.1	4925	3000K, 90+
14	1587	113.3	5752	3000K, 90+
16	1786	111.6	6423	3000K, 90+
19	1984	105.8	7190	3000K, 90+

Data is based on 3000K-90+ IES files available on website.
Data is based on HDL2.5-RD 30° Medium Flood optics. For other beam spreads see pages 7-9.

Fixture Type

Round/Square	New Construction	Trim	Trimless	Millwork
Yes	Yes	Yes	Yes	Yes

See separate spec sheet for Square trims

Electrical Data

	6W		8W		10W		12W		14W		16W		19W	
Voltage	System Watts	Amps	System Watts	Amps	System Watts	Amps	System Watts	Amps	System Watts	Amps	System Watts	Amps	System Watts	Amps
120V	6	0.05	8	0.07	10	0.08	12	0.10	14	0.12	16	0.14	19	0.16
277V	6	0.02	8	0.03	10	0.04	12	0.05	14	0.05	16	0.06	19	0.07

Electronic constant current LED driver.

Hornet® 2.5

2.5" Round Downlights

amerlux

PROJECT:	TYPE:

Ordering Information - Housing/Frame

_____ . _____ . _____ . _____ . _____

1 2 3 4 5

1 Model

HDL2.5-R-NC *(New Construction)*
HDL2.5-R-CP *(Chicago Plenum (CCEA) housing)*
HDL2.5-R-IC *(Insulated Ceiling/air tight, 12W max)*

2 Style

T trimmed
TL trimless *(patent pending screwless mud-ring)*
MWK millwork *(for 1/2" - 11/16" ceiling thickness)*
MWK1 millwork *(for 3/4" - 1-1/2" ceiling thickness)*

3 Wattage

6
8
10
12
14 *(not available with IC)*
16 *(not available with IC)*
19 *(not available with IC)*

4 Driver *(for non-dimming, select LE/TE option)*

Wired
LE/TE TRIAC/ELV dimming
HILUME-P-ECO - Lutron Hi-lume® EcoSystem Premier 0.1% dim with soft on and fade to black
0-10V 0-10V dimming, 1% dim
0-10V-DD* 0-10V dimming, 0.1% deep dimming
DALI DALI dimming, 1% dim
DALI-DD* DALI dimming, 0.1% deep dimming

Wireless *(New Construction only)*
AWNR-010* Lutron Athena wireless node, RF only, 0-10V
BN-BT-010* BubblyNet Bluetooth node, 0-10V

**** Consult factory for lead time.***

5 Options/Accessories

HB49 - hanger bars from min 29" to max 49"
Note: 26" hanger bars are included as standard.
*Choose **HB49** option above for larger mounting spaces only.*

Ordering Information - Trim

_____ . _____ . _____ . _____ . _____ . _____

1 2 3 4 5 6

1 Model

HDL2.5-RD *(downlight)*
HDL2.5-RA *(adjustable)*
HDL2.5-RW *(wall wash)*

2 Style

T trimmed
TL trimless
MWK millwork

3 Finish

Trimmed
MWW matte white, white flange
MBW matte black, white flange
SLVW matte silver, white flange
MBB matte black, black flange
SLVS matte silver, silver flange

Trimless/Millwork
MB matte black
MW matte white
SLV matte silver

4 Beam Spread *(not required for RW model)*

20D narrow flood 20°
30D medium flood 30°
40D flood 40°
50D wide flood 50°

For 10° super narrow spot distribution, see HDL2.5-RA-SNSP spec sheet. (Note: this option is only for the adjustable model).

For Shallow Trim with 60° or 80° beam, see HDL2.5-RDS spec sheet. (Note: this option is only for the downlight model).

5 Color Temp

279 2700K-90+
309 3000K-90+
359 3500K-90+
409 4000K-90+
SA27 Signature Ambiance 2700K-90+
SA30 Signature Ambiance 3000K-90+
SW30 Signature White 3000K-90+
SC30 Signature Color 3000K-90+

6 Options/Accessories *(not available for RW model)*

HEX hexcell louver
SOL solite beam softening
LS linear spread lens
SHW shower, comes standard with solite lens, not compatible with other options/accessories *(only available for (RD) downlight model & (T) trimmed style)*

Hornet® 2.5

2.5” Round Downlights

PROJECT:	TYPE:

Specifications

Application

Retail, commercial and hospitality ambient lighting.

Optical

Downlight/Adjustable:

Beam spreads: Narrow Flood, 20º; Medium Flood, 30º; Flood, 40º; Wide Flood, 50º

Adjustable Tilt: 40° max

LED

Color Temp Options: 2700K, 3000K, 3500K, 4000K

Signature Ambiance, White, and Color options available *(see below)*

CRI: 90+ typ.

R9 Values: 55 *(92 CRI)*

Binning: 3 MacAdam *(SDCM)*

Life: 50,000+ hrs, > 70% of initial lumens at 50,000 hrs

Signature Ambiance *(2700K & 3000K): A refined, warm light recipe ideal for hospitality, residential-style commercial spaces, and retail. It accentuates woods, textiles, bronze, and darker finishes, creating a relaxed and inviting luxury environment.*

Signature White *(3000K): A premium white option built for crisp displays, clean architectural finishes, and retail settings. It enhances white surfaces and visual clarity, ensuring whites read brighter without sacrificing refinement.*

Signature Color *(3000K): A vibrant, color-enhancing option designed for spaces where merchandise, fabrics, and finishes need to stand out. It heightens the contrast between colors and whites, delivering deeper, richer presentations for dynamic retail and hospitality experiences.*

Electrical

Wattage: 6W, 8W, 10W, 12W, 14W, 16W, 19W

Electronic constant current LED driver, universal operating voltage 120/277VAC input.

This product complies with IEEE C62.41 for surge endurance up to 2.5KV. Amerlux® recommends using additional surge protection with this unit (supplied by others), surge and over voltage damage is not covered under warranty.

Drivers

Universal Operating Voltage 120/277VAC.

Smooth linear dimming curve to minimum dim of 1% or 0.1%.

UL8750 with Class 2 output.

Complies with FCC Part 15, Class A.

UL Listed Class P.

Built-in protection feature *(short circuit, overload, Thermal, 2.5kV surge)*.

See dimming compatibility page for additional information.

Finish

Powder coat paint/wet paint

Consult factory for custom finishes

Mounting

26” Hanger bars included.

Optional **HB49** - hanger bars from min 29” to max 49” available.

Trimmed Fixture:

For use in grid or sheetrock ceilings, 1/2” to 1-1/2” standard.

Trimless Fixture:

For use in sheetrock ceilings, max ceiling thickness 1-1/2”.

Patent pending screwless mud-ring.

Millwork Fixture:

Millwork extension collars are based on ceiling material specifications and thickness. Provides flush trim appearance level with ceiling material. Max thickness 1-1/2”.

Ceilings thicker than 3/4” will require an extension collar.

Consult factory for ceilings above 1-1/2” thickness (downlight & wall wash only).

Certifications

CSA damp as tested to UL 1598 standards

IC/AT rated *(optional, 12W max)*

Damp location

Wet location *(interior, shower trim only)*

Warranty

5 year limited warranty *(see Amerlux website for details)*

Accessories *(not available for RW model)*

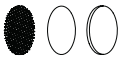

Hexcell Louver, Solite Lens/Film, Linear Spread Lens

Hornet® 2.5

2.5" Round Downlights

amerlux

PROJECT:	TYPE:

Product Details - Downlight

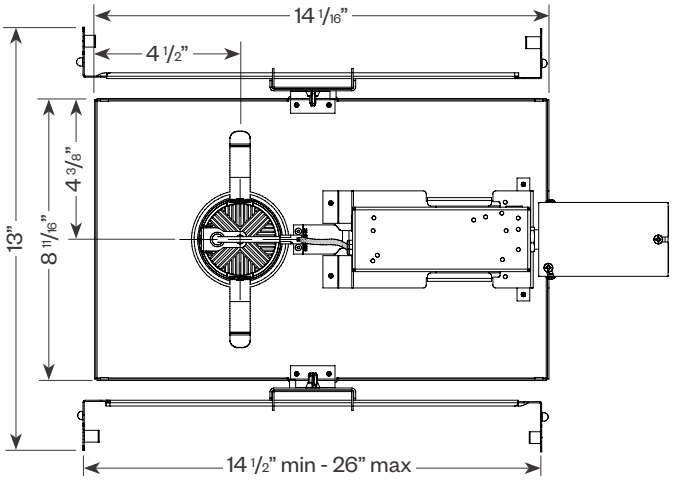

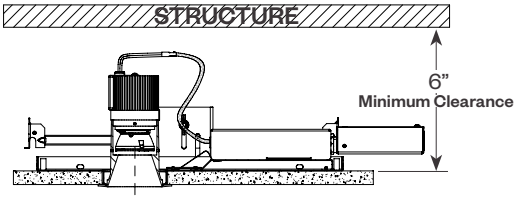

IC/AT & CP Housing

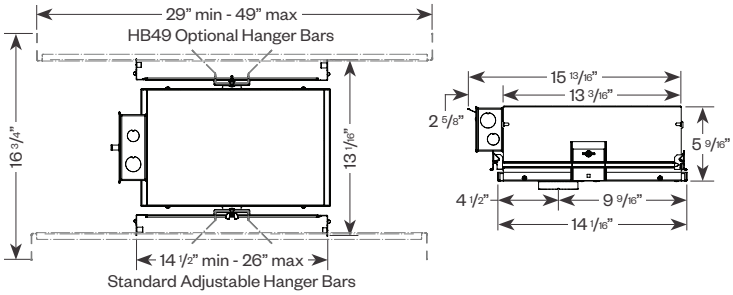

Downlight Trimmed

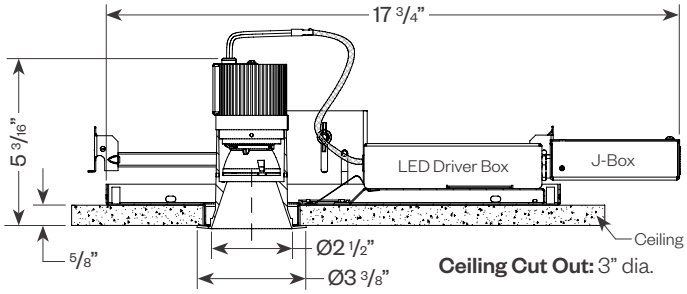

Downlight Trimless

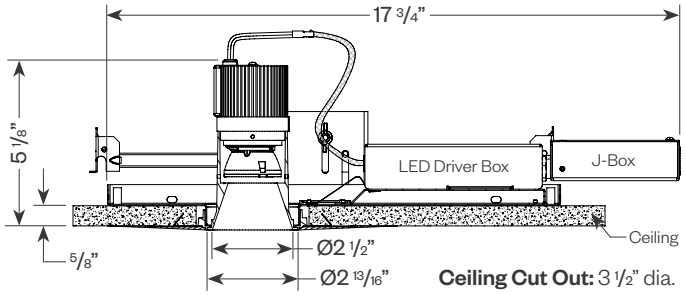

Trimless Detail

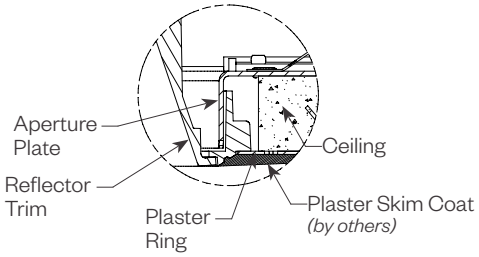

Downlight Millwork

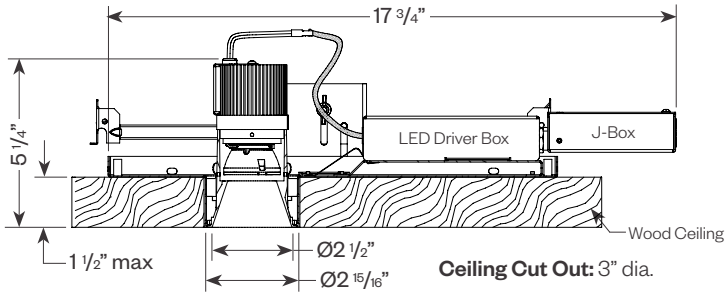

Millwork Detail

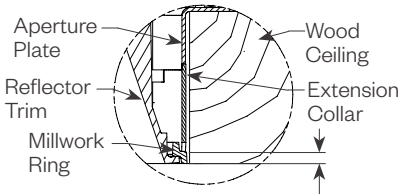

1/4" gap required between edge of aperture & ceiling plane for the trim to be flush with ceiling.

Hornet® 2.5

2.5" Round Downlights

amerlux

PROJECT:	TYPE:

Product Details - Adjustable

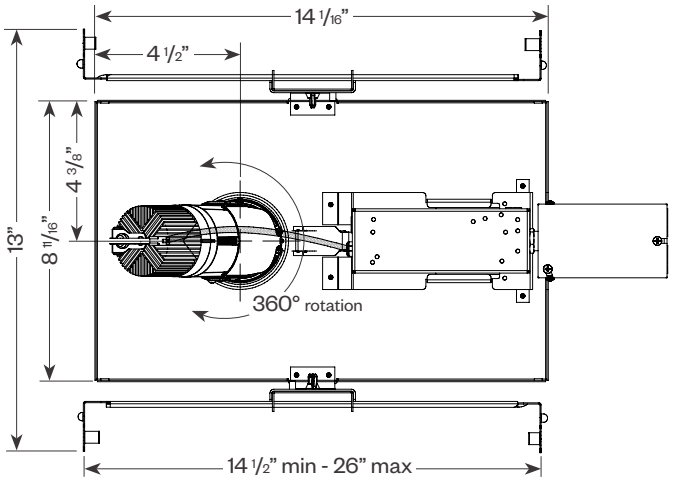

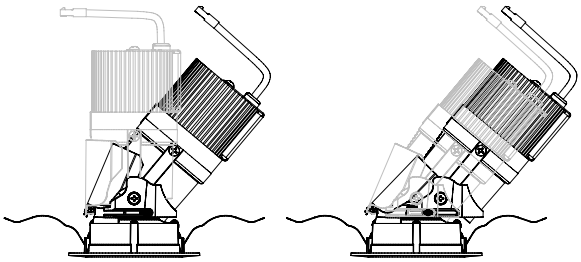

Note: 3/4" maximum ceiling thickness for optimal adjustability.

Adjustable Trimmed

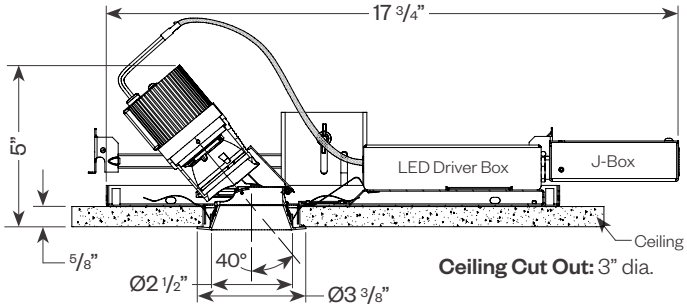

Adjustable Trimless

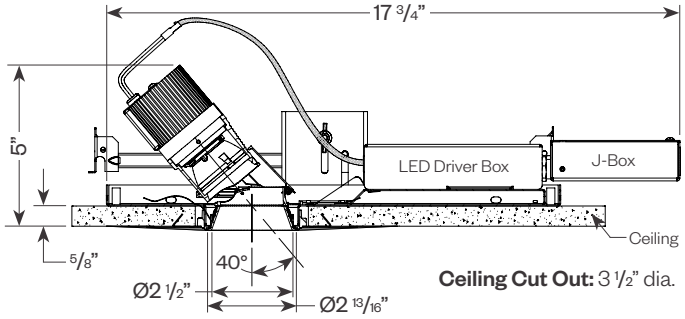

Adjustable Millwork

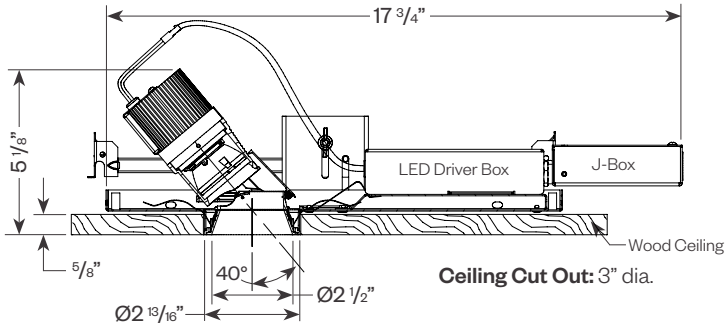

Trimless Detail

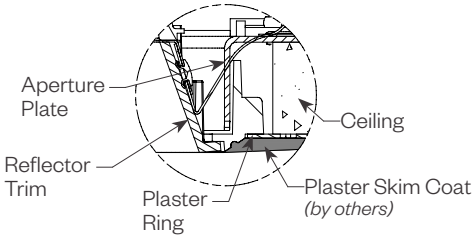

Millwork Detail

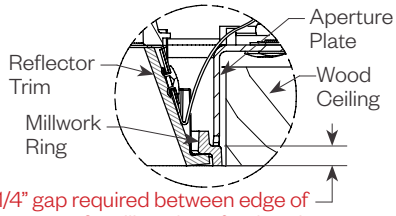

1/4" gap required between edge of aperture & ceiling plane for the trim to be flush with ceiling.

Hornet® 2.5

2.5" Round Downlights

amerlux

PROJECT:	TYPE:

Product Details - Wall Wash

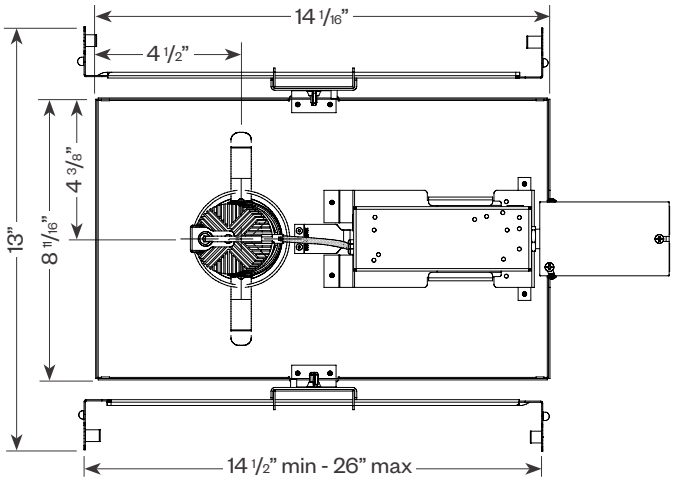

Wall Wash Trimmed

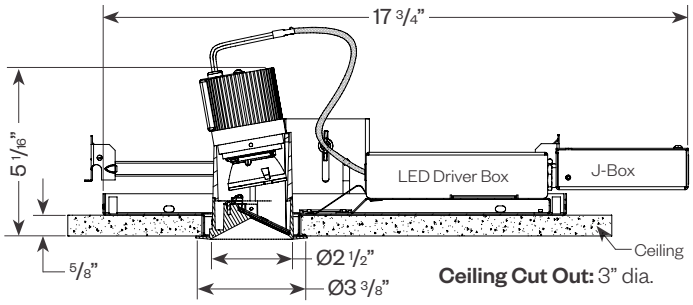

Wall Wash Trimless

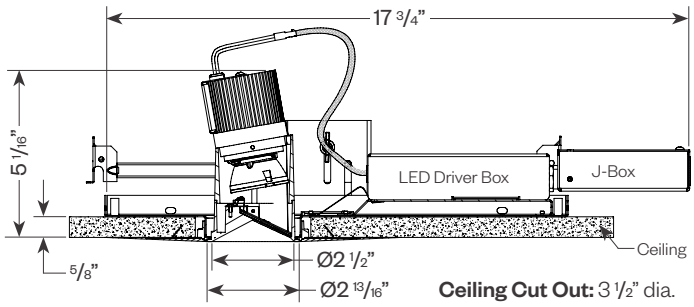

Trimless Detail

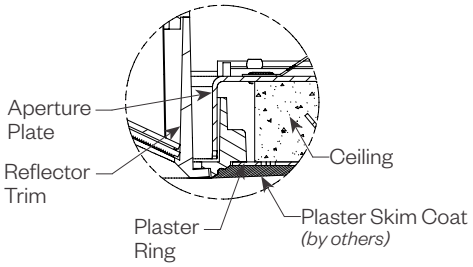

Wall Wash Millwork

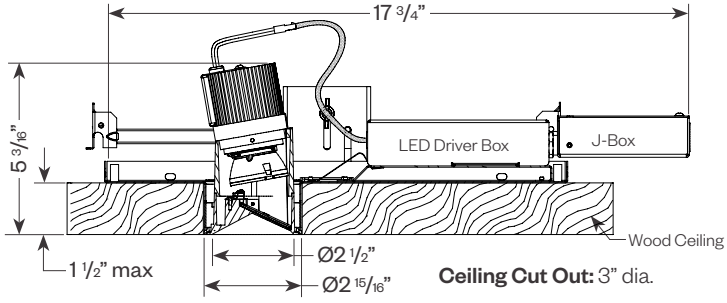

Millwork Detail

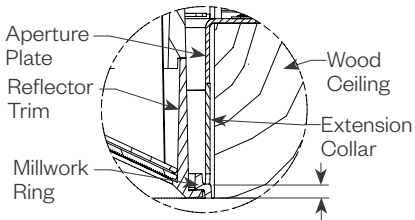

1/4" gap required between edge of aperture & ceiling plane for the trim to be flush with ceiling.

Hornet® 2.5

2.5" Round Downlights

amerlux

PROJECT:	TYPE:

Performance Data - Round Downlight *(HDL2.5-RD)*

Multiplying Factors: *(Multiplying Factor is based on 3000K-90+ 120V IES file on website)*

Wattage:	6W	8W	10W	12W	14W	16W	19W
Factor:	0.36	0.47	0.58	0.69	0.80	0.90	1.0

Beam:	20D	30D	40D	50D
UGR:	<11	<8	<10	<11

Tested with Matte White Finish.
UGR values calculated using UGR table method.

CCT:	2700K-90+	3000K-90+	3500K-90+	4000K-90+	3CLA	SA27	SA30	SW30	SC30
Factor:	1.005	1.000	1.016	1.029	0.667	0.951	0.975	1.015	0.941

19W LED, 3000K-90+

Narrow Flood Distribution, 20°
LTL #15682016.01
Lumens: 1843

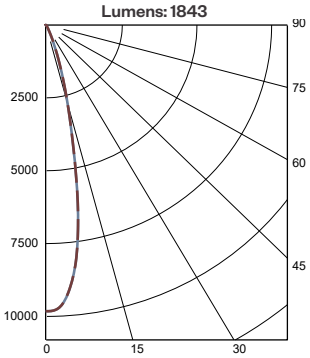

Candelas at Nadir

Deg	Candela
0	9824
5	9016
15	2567
25	404
35	107
45	45

Medium Flood Distribution, 30°
LTL # 15682016.02
Lumens: 1984

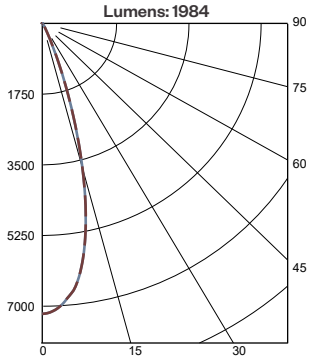

Candelas at Nadir

Deg	Candela
0	7190
5	6835
15	3745
25	474
35	81
45	32

Flood Distribution, 40°
LTL # 15682016.03
Lumens: 1929

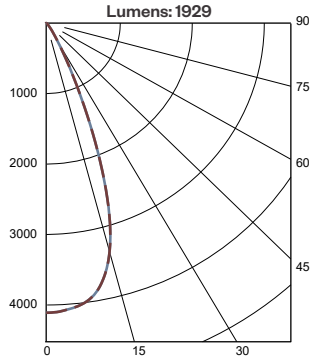

Candelas at Nadir

Deg	Candela
0	4111
5	4060
15	3332
25	998
35	149
45	40

Wide Flood Distribution, 50°
LTL # 15682016.04
Lumens: 1941

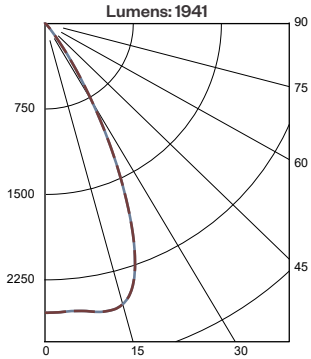

Candelas at Nadir

Deg	Candela
0	2539
5	2534
15	2550
25	1552
35	324
45	47

Application Data - Round Downlight *(HDL2.5-RD)*

Notes and Definitions:
Beam spread is to 50% center beam candlepower (CBCP).
D=Distance to floor or wall.
FC=Footcandles on floor or wall at center beam aiming location.
L=Effective Visual Beam length in feet (50% of maximum footcandle level).
W=Effective Visual Beam width in feet (50% of maximum footcandle level).

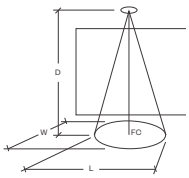

0° Aiming Angle Horizontal Footcandles

	D	FC	L	W
Narrow Flood	5.0'	312	2.2	2.2
	7.5'	159	3.1	3.1
	10.0'	94	3.9	3.9
	12.5'	61	4.9	4.9

0° Aiming Angle Horizontal Footcandles

	D	FC	L	W
Medium Flood	5.0'	254	2.7	2.7
	7.5'	121	3.9	3.9
	10.0'	69	5.3	5.3
	12.5'	45	6.5	6.5

0° Aiming Angle Horizontal Footcandles

	D	FC	L	W
Flood	5.0'	156	3.4	3.4
	7.5'	71	5.2	5.2
	10.0'	41	7.0	7.0
	12.5'	26	8.7	8.7

0° Aiming Angle Horizontal Footcandles

	D	FC	L	W
Wide Flood	5.0'	99	4.6	4.6
	7.5'	45	6.8	6.8
	10.0'	25	9.1	9.1
	12.5'	16	11.4	11.4

Hornet® 2.5

2.5" Round Downlights

amerlux

PROJECT: **TYPE:**

Performance Data - Round Adjustable *(HDL2.5-RA)*

Multiplying Factors: *(Multiplying Factor is based on 3000K-90+ 120V IES file on website)*

Wattage:	6W	8W	10W	12W	14W	16W	19W
Factor:	0.36	0.47	0.58	0.69	0.80	0.90	1.0

Beam:	20D	30D	40D	50D
UGR:	<6	<2	<7	<8

Tested with Matte White Finish.
UGR values calculated using UGR table method.

CCT:	2700K-90+	3000K-90+	3500K-90+	4000K-90+	3CLA	SA27	SA30	SW30	SC30
Factor:	1.005	1.000	1.016	1.029	0.667	0.951	0.975	1.015	0.941

19W LED, 3000K-90+

NarrowFlood Distribution, 20°
LTL #15657122.09
Lumens: 1617

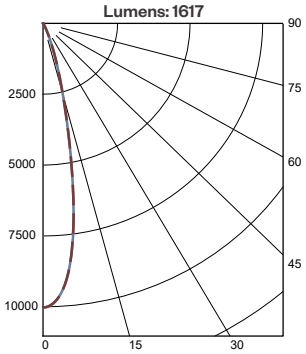

Candelas at Nadir

Deg	Candela
0	10030
5	9012
15	2369
25	275
35	32
45	6

Medium Flood Distribution, 30°
LTL #15657122.10
Lumens: 1791

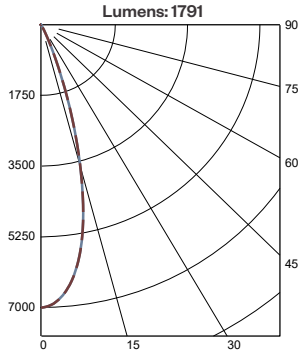

Candelas at Nadir

Deg	Candela
0	7008
5	6637
15	3529
25	396
35	32
45	4

Flood Distribution, 40°
LTL #15657122.11
Lumens: 1754

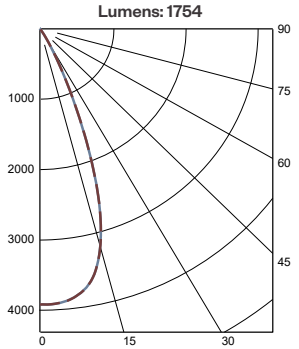

Candelas at Nadir

Deg	Candela
0	3920
5	3892
15	3181
25	954
35	80
45	6

Wide Flood Distribution, 50°
LTL #15657122.12
Lumens: 1694

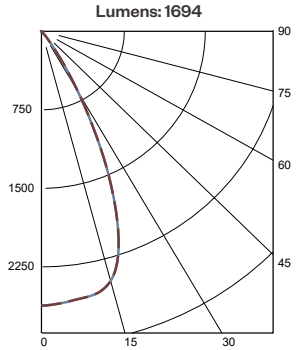

Candelas at Nadir

Deg	Candela
0	2620
5	2597
15	2455
25	1338
35	205
45	9

Application Data - Round Adjustable *(HDL2.5-RA)*

Notes and Definitions:
Beam spread is to 50% center beam candlepower (CBCP).
D=Distance to floor or wall.
FC=Footcandles on floor or wall at center beam aiming location.
L=Effective Visual Beam length in feet (50% of maximum footcandle level).
W=Effective Visual Beam width in feet (50% of maximum footcandle level).

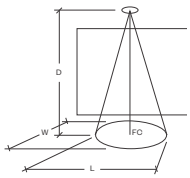

0° Aiming Angle Horizontal Footcandles

	D	FC	L	W
Narrow Flood	5.0'	309	2.1	2.1
	7.5'	159	3.0	3.0
	10.0'	94	3.8	3.8
	12.5'	62	4.7	4.7

0° Aiming Angle Horizontal Footcandles

	D	FC	L	W
Medium Flood	5.0'	244	2.7	2.7
	7.5'	117	3.9	3.9
	10.0'	67	5.2	5.2
	12.5'	44	6.4	6.4

0° Aiming Angle Horizontal Footcandles

	D	FC	L	W
Flood	5.0'	149	3.4	3.4
	7.5'	68	5.2	5.2
	10.0'	39	7.0	7.0
	12.5'	25	8.7	8.7

0° Aiming Angle Horizontal Footcandles

	D	FC	L	W
Wide Flood	5.0'	101	4.3	4.3
	7.5'	46	6.3	6.3
	10.0'	26	8.5	8.5
	12.5'	17	10.6	10.6

Hornet® 2.5

2.5” Round Downlights

amerlux

PROJECT:	TYPE:

Performance Data - Round Wall Wash *(HDL2.5-RW)*

Multiplying Factors: *(Multiplying Factor is based on 3000K-90+ 120V IES file on website)*

Wattage:	6W	8W	10W	12W	14W	16W	19W
Factor:	0.36	0.47	0.58	0.69	0.80	0.90	1.0

CCT:	2700K-90+	3000K-90+	3500K-90+	4000K-90+	3CLA	SA27	SA30	SW30	SC30
Factor:	1.005	1.000	1.016	1.029	0.667	0.951	0.975	1.015	0.941

19W LED, 3000K-90+

LTL #15657122.14

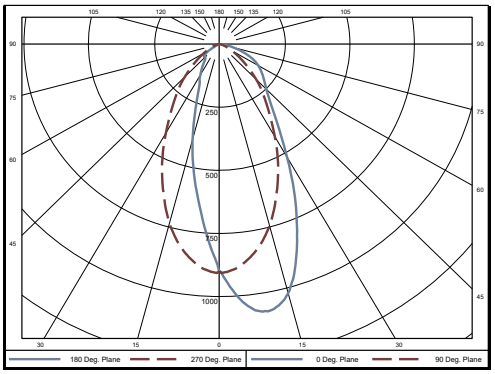

ZONAL LUMEN SUMMARY

Zone	Lumens	%Fixt
0-40	690	68.0
0-60	930	91.6
0-90	1015	100.0
90-180	0	0.00

Luminaire Efficacy: 54.4 lm/W

Application Data - Round Wall Wash *(HDL2.5-RW)*

Footcandles are average and rounded off. Data for multiple units are based on a minimum of five units.

1.5 Feet from Wall

1.5′ 1.5′ 1.5′ 1.5′

Distance from ceiling							
0.5′	36	42	43	44	43	42	36
1.5′	59	72	76	76	75	71	58
2.5′	51	63	68	69	68	63	51
3.5′	40	48	53	54	53	49	40
4.5′	29	35	38	39	38	35	29
5.5′	21	25	27	28	28	25	21
6.5′	16	18	20	21	20	19	16
7.5′	12	14	15	16	15	14	12

1.5 Feet from Wall

2′ 2′ 2′ 2′

Distance from ceiling									
0.5′	31	31	35	32	35	31	34	30	31
1.5′	49	55	58	58	59	57	58	54	49
2.5′	42	50	53	53	54	53	53	50	42
3.5′	33	39	41	42	43	42	41	39	33
4.5′	24	28	30	31	32	31	30	28	24
5.5′	17	20	22	23	23	23	22	20	17
6.5′	13	15	17	17	18	17	17	15	13
7.5′	10	12	13	13	14	14	13	12	10

2 Feet from Wall

2′ 2′ 2′ 2′

Distance from ceiling									
0.5′	17	19	20	20	20	19	20	18	17
1.5′	34	40	42	42	43	42	42	39	34
2.5′	33	39	42	43	44	43	42	39	33
3.5′	29	34	37	38	39	38	37	34	29
4.5′	24	28	31	32	32	32	31	28	24
5.5′	19	22	25	26	26	26	24	22	19
6.5′	15	18	19	20	21	20	19	18	15
7.5′	12	14	16	16	16	16	16	14	12

Hornet® 2.5

2.5” Round Downlights

PROJECT:	TYPE:

Dimming Compatibility

Amerlux® Hornet® fixtures are compatible with all major dimming protocols prevalent in the United States. Please see below for general compatibilities and wiring diagrams. Amerlux recommends testing your unique dimming configuration as the exact full configuration (Dimmer, Fixture Quantity, Voltage, etc) may affect dimming performance.

--- NOTE: INFORMATION BELOW IS FOR WIRED DIMMERS ONLY. FOR WIRELESS DIMMERS, CONSULT FACTORY ---

TRIAC *(Forward Phase)* DIMMING *(Standard)*

Utilizes standard TRIAC dimmers that are in wide use in installations across the US. Best for retrofit applications where TRIAC dimmers are installed.

Notes:

- 120VAC or 277VAC*
- Dims down to 5% light output (most cases)
- Consult Dimming manufacturer for installation instructions - **DO NOT SHARE NEUTRALS!**
- Must meet dimmer Minimum Load Requirements per dimming manufacturer

TRIAC Wiring Diagram

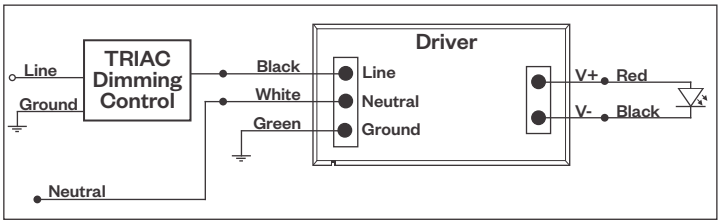

Compatible Dimmers†:	
Wall Box *(TRIAC 120VAC)*	**Central System**
Lutron “Diva”	Lutron “GP” Panel
Lutron “Nova-T”	Lutron Grafik Eye QS
Lutron “Maestro"	
Lutron “Skylark”	

ELV - Electronic Low Voltage *(Reverse Phase)* DIMMING *(Standard)*

Utilizes specialized “ELV” dimmers.

Notes:

- 120VAC or 277VAC*
- Dims down to 5% light output (most cases)
- Consult Dimming manufacturer for installation instructions - **DO NOT SHARE NEUTRALS!**
- Must meet dimmer Minimum Load Requirements per dimming manufacturer

ELV Wiring Diagram

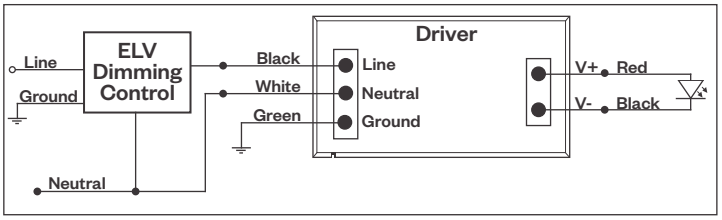

Compatible Dimmers†:		
Wall Box *(ELV 120VAC)*	**Wall Box** *(ELV 277VAC)*	**Central System**
Lutron “Diva”	Leviton Revoir II AWSMT-E	Lutron “GP” Panel with PHPM-PA 120/277VAC
Lutron “Nova-T”		Lutron Grafik Eye QS with PHPM-PA 120/277VAC
Lutron “Maestro"		
Lutron “Skylark”		
Leviton “Surslide”		
Leviton “Vizio”		

Notes:

* Driver is 277VAC dimmable with appropriate dimmer (by others). All provided wiring diagrams show 120VAC wiring colors and method. Please refer to 277VAC dimmer installation instructions for 277VAC wiring diagrams.

† The absence of a dimmer from the lists above does not imply incompatibility. Please consult factory for compatibility inquiries.

Hornet® 2.5

2.5” Round Downlights

PROJECT:	TYPE:

Dimming Compatibility *(continued)*

Amerlux® Hornet® fixtures are compatible with all major dimming protocols prevalent in the United States. Please see below for general compatibilities and wiring diagrams. Amerlux recommends testing your unique dimming configuration as the exact full configuration (Dimmer, Fixture Quantity, Voltage, etc) may affect dimming performance.

--- NOTE: INFORMATION BELOW IS FOR WIRED DIMMERS ONLY. FOR WIRELESS DIMMERS, CONSULT FACTORY ---

0-10V DIMMING

Integrates into a variety of building management and daylighting controls

Notes:

- 120VAC or 277VAC*
- Dims down to 1% light output
- Requires interface to turn off power to driver
- Consult Dimming manufacturer for installation instructions - **DO NOT SHARE NEUTRALS!**

Compatible Dimmers†:

Wall Box		Central System
Lutron “Diva” - DVSTV	Leviton Renoir II 0-10V	Lutron Grafik Eye with GRX-TVI Interface

0-10V Wiring Diagram

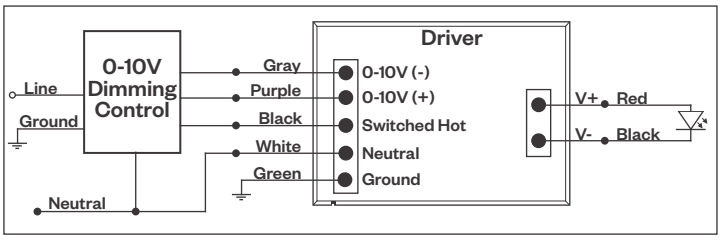

LUTRON LDE1 DIMMING

Integrates into Lutron EcoSystem building management

Notes:

- 120VAC or 277VAC*
- Dims down to 1% light output
- EcoSystem Control
- Consult Dimming manufacturer for installation instructions - **DO NOT SHARE NEUTRALS!**

Compatible Dimmers†:

Lutron ECO System	Central System
Pow Pak Dimming Modules	Lutron EcoSystem compatible controls
Energi Savr Node	
Grafik Eye QS/Homeworks	
QS Control Unit	
Quantum Hub	
Homeworks QS/My Room	

LDE1 *(HILUME-H-ECO)* EcoSystem Digital Control Wiring Diagram

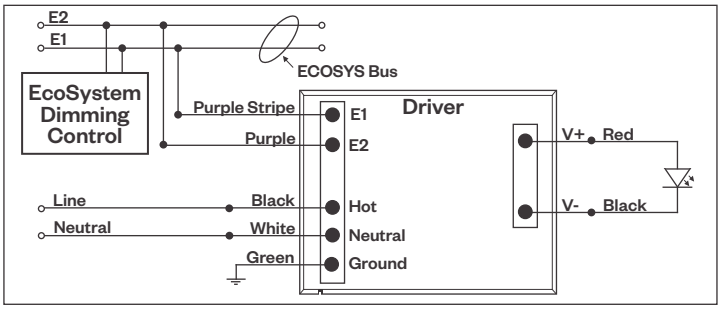

DALI DIMMING

Digital control protocol allows individual fixture control

Notes:

- 120VAC - 277VAC*
- Dims down to 1% light output in most cases

Compatible Dimmers†:

Wall Box *(3-Wire Fluorescent)*	Central System
Leviton CD250 Controller	Dynalite
	Fifth Light

DALI Wiring Diagram

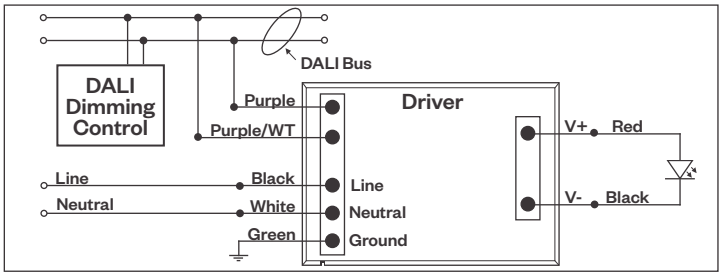

Notes:

* Driver is 277VAC dimmable with appropriate dimmer (by others). All provided wiring diagrams show 120VAC wiring colors and method. Please refer to 277VAC dimmer installation instructions for 277VAC wiring diagrams.

† The absence of a dimmer from the lists above does not imply incompatibility. Please consult factory for compatibility inquiries.