Passo SQ

6” Soft Glow LED Recessed Wall Luminaire

PROJECT:	TYPE:

Features

The Passo family of luminaires includes high quality, architecturally relevant fixtures suitable for use in both outdoor or indoor applications. All members of the Passo family feature an independently sealed optical chamber and fully potted driver. These features are especially beneficial in exterior applications as they help compensate for the challenges in getting a good seal between a pre-installed back box and the faceplate as well as those challenges in fully sealing the conduit system Each luminaire is available in a choice of three output levels to help tailor the desired illuminance to the project and a standard 0-10V dimmable driver allows even further flexibility.

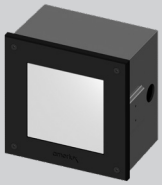

PSCS6

Product Overview

Type:	Recessed Wall Luminaire
Wattage:	up to 16.2W
Lumen Output:	up to 367 lm
Color Temp:	2700K, 3000K, 4000K
Dimming:	0-10V

Certifications

5 year limited warranty AMERLUX LED

POWDER COATED TOUGH™

Electrostatic sensitive device. observe precautions for handling

Fixture Summary

Application:
Designed for new construction in interior or exterior hollow walls or poured concrete.

Construction:
- Die-cast aluminum housing with protective powdercoat finish
- Sealed die-cast aluminum internal optical chamber
- Die-cast aluminum faceplate
- 1/8” tempered opal glass lens

Driver:
- Drive current *(175, 350 or 700mA)*
- 2.5kV surge protection
- Fully potted
- Input voltage 120V-277V auto-sensing
- 0-10V dimmable down to 10%

Optics:
Individually sealed optical chamber insures LEDs are secure independent of the installation of the back box.

Finish:
Premium quality thermoset polyester powdercoat faceplate for a durable finish.

ETL listed, suitable for wet locations.

Passo SQ

6" Soft Glow LED Recessed Wall Luminaire

PROJECT:	TYPE:

Ordering Information - Luminaire

PSCS6 . _____ . _____

1 2 3

1	Model	2	Performance Code	3	Finish
	PSCS6		**L27** 2700K, 175mA		**ANT** anthracite gray
			L30 3000K, 175mA		**BLK** satin black
			L40 4000K, 175mA		**CLB** classic bronze
			H27 2700K, 350mA		**SLV** silver
			H30 3000K, 350mA		**WHT** white
			H40 4000K, 350mA		**CSTM** custom
			VH27 2700K, 700mA		
			VH30 3000K, 700mA		
			VH40 4000K, 700mA		

Ordering Information - Back Box

Back Box must be ordered for a complete unit, ordered separately.

SQBX-6

1

1	Model
	SQBX-6

Note: Back Box can be shipped ahead of the steplight, upon request.

Ordering Information - Optional Adaptor Plate *(for retrofit application using an existing wall box or cavity, see pg 4 for details)*

_____ . _____ x _____ . _____ . _____

1 2 3 4

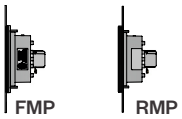

1	Model	2	Plate Size	3	Mounting Hole Location	4	Finish
	FMP-PSCS6 front mount adaptor plate		_____ X _____ (W) (H)		**CRN** corner *(1 in each corner)*		**ANT** anthracite gray
	RMP-PSCx6 rear mount adaptor plate		FMP W: 5.5" min - 10" max H: 5.5" min - 10" max RMP W: 5.5" min - 12" max H: 5.5" min - 12" max				**BLK** satin black
							CLB classic bronze
							SLV silver
							WHT white
							CSTM custom

Notes: 1. Back box is NOT used with this optional plate.
2. A signed approval drawing showing the requested dimensions will be required to process an order.

Passo SQ

6” Soft Glow LED Recessed Wall Luminaire

PROJECT:	TYPE:

Product Detail

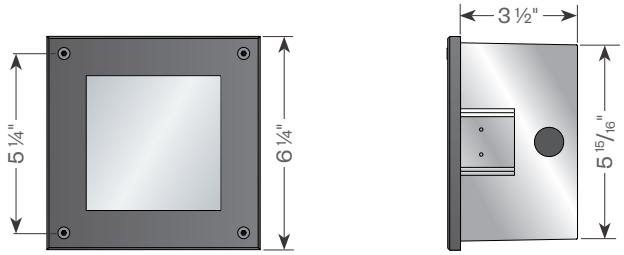

Construction Detail

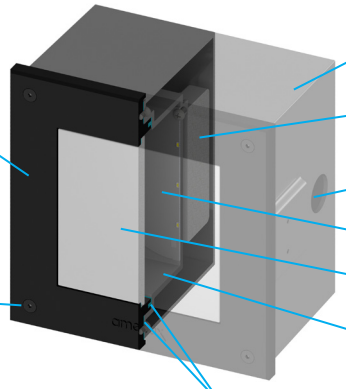

Application Brackets *(included with order)*

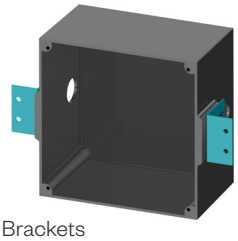

Horizontal Brackets
(Hollow Wall)

Passo SQ

6" Soft Glow LED Recessed Wall Luminaire

PROJECT:	TYPE:

Optional Adapter Plate Detail *(for retrofit applications using an existing wall box or cavity)*

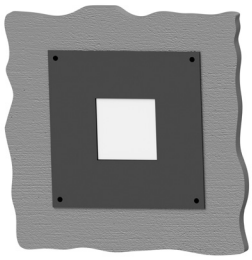

Front Mount Plate *(**FMP-PSCS6**)*

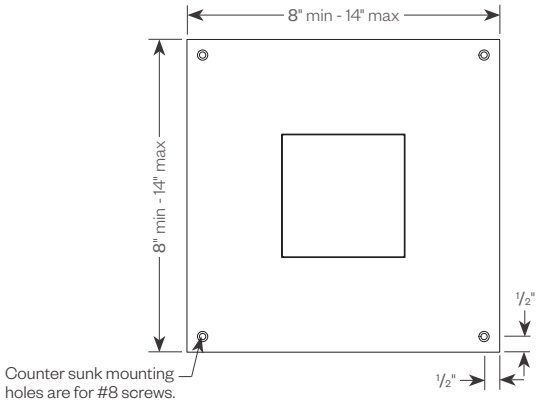

Standard dimensions from the corner are shown.
If alternate dimensions are needed, please specify.

Space required to mount fixture.

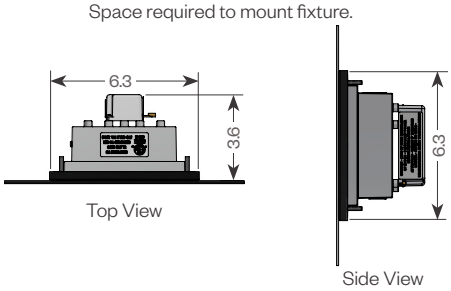

Top View

Side View

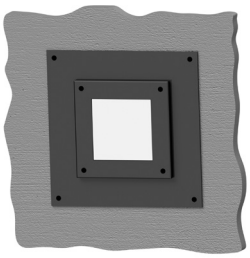

Rear Mount Plate *(**RMP-PSCx6**)*

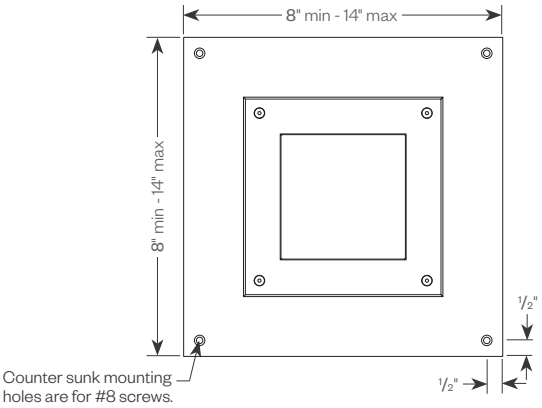

Standard dimensions from the corner are shown.
If alternate dimensions are needed, please specify.

EDR Required for dimensions beyond the range shown.

Space required to mount fixture.

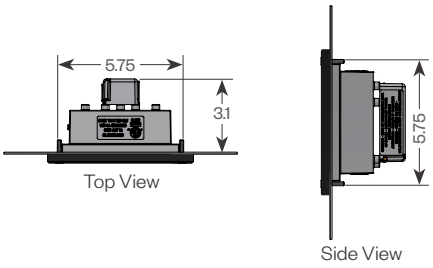

Top View

Side View

Performance Data

Performance Code	CCT/CRI	Approx. Lumens	Drive Current	Nominal Input Power
L27	2700K/80	132	175mA	4.2W
L30	3000K/80	138		
L40	4000K/70	148		
H27	2700K/80	185	350mA	8.1W
H30	3000K/80	193		
H40	4000K/70	207		
VH27	2700K/80	328	700mA	16.2W
VH30	3000K/80	342		
VH40	4000K/70	367		

Note: IES files available on our website. For VHxx data - use Hxx IES files with a 1.77 multiplier.
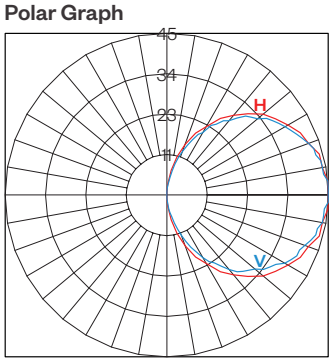
Polar Graph